HIOKI

# DIFFERENTIAL PROBE 9322

Recorders

CE

# Introducing a new 3-function universal probe

- Floating measurement of high-voltage waveforms
- Detection of power supply surge noise
- RMS rectified output

Main Applications

Measurement of potential differences included in common mode voltages, such as IGBT

- Measurement of commercial power line waveforms, such as on 400V power lines
- Measurement of high voltage surge noise waveforms
- Measurement of the RMS value of inverter outputs, etc.

ISO 9001 JMI-0216

ISO14001 JQA-E-90091

INTERNET HIOKI Website www.hioki.com

HIOKI company overview, new products, environmental considerations and other information are available on our website.

## ❑ Product outline and features

### 3 kinds of measurement with a single probe

The **DIFFERENTIAL PROBE 9322** provides floating measurement of high voltage waveforms, detection of surge noise on power supply lines, and true RMS rectified output of high voltage AC.

### Works with a variety of power supplies, such as an AC adapter or logic terminal

For operation, convenience is the key. Operating power for the **DIFFERENTIAL PROBE 9322** can be supplied from the standard logic terminals of a MEMORY HiCORDER or the clamp sensor input terminals of an **F/V UNIT 8940**, as well as from the probe's own **AC ADAPTER 9418-15**.

### Floating measurement of high-voltage waveforms (DC mode)

When measuring the potential difference in signals containing a large common mode voltage component on commercial power lines, an electrocution hazard exists unless measurement is done using an instrument with fully isolated inputs, such as a MEMORY HiCORDER. When measuring signals carrying common mode voltages with a high frequency component (such as those produced by inverter control circuits and switching power supplies), measurements are greatly affected by the rate of common mode elimination at the isolated inputs. Although MEMORY HiCORDERs provide the greatest possible to-ground voltage rating (ordinarily 400V AC or DC), use of the **DIFFERENTIAL PROBE 9322** raises the rating level to 1500V AC (CAT Ⅱ), 600V AC (CAT Ⅲ), allowing measurement of circuits carrying even larger common mode voltages. Potential differences can be measured for input voltages of up to 2000V DC or 1000V AC (CAT Ⅱ), 600V AC/DC (CAT Ⅲ), producing a 1/1000 divided output.

### Measurement of power line surge noise (AC mode)

Upon selecting the AC output mode, the AC coupled signal inside the probe is divided by 1000 for output. Since the probe's frequency range is from 1kHz to 10MHz, output waveforms are produced only when input voltages contain high frequency components, such as surge noise imposed on 50/60Hz commercial mains power. The probe can thus serve as either a noise detector or for measurement of wave peaks.

### Provides output of true RMS rectified voltages (RMS mode)

Upon selecting the RMS output mode, the input signal is divided by 1000, rectified to obtain the true RMS value, then output as a direct current voltage. True RMS rectification is performed by an analog circuit with a bandwidth of 40Hz to 100kHz, allowing true RMS conversion of signals containing high frequency components, such as inverter output waveforms, as well as 50/60Hz commercial mains.

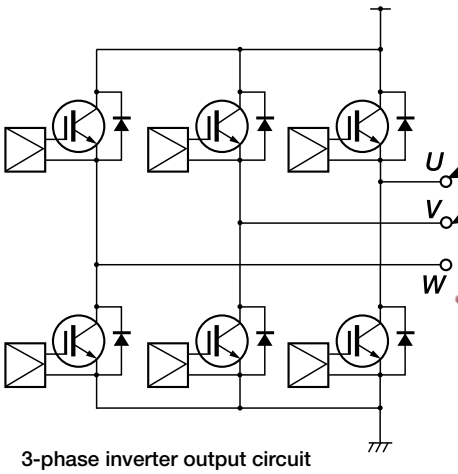


3-phase inverter output circuit
(Floating measurement is essential due to varying emitter potentials of each phase.)

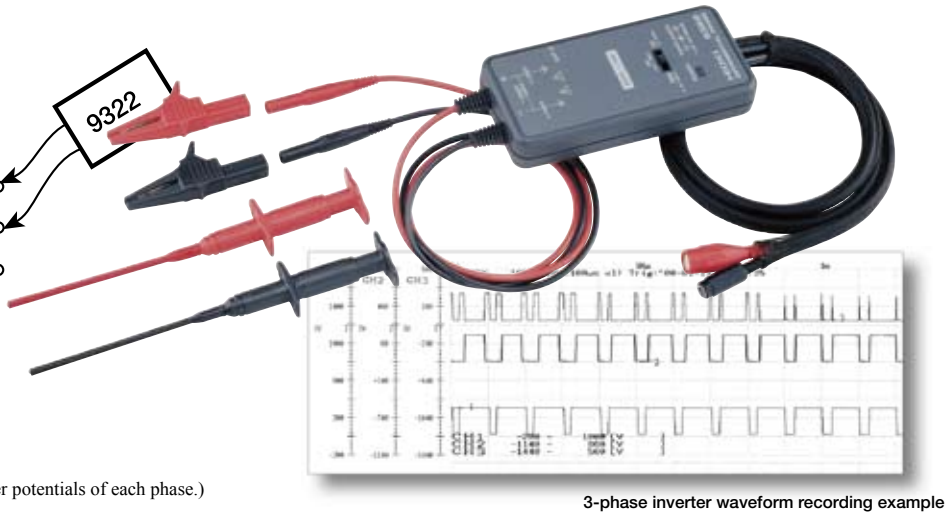


3-phase inverter waveform recording example

**Dimensions and mass:** approx. 70 (2.76in) W × 150 (5.91in) H × 25 (0.98in) D mm, approx. 350g (12.3oz)
**Cable length:** Main unit cable 1.3 m (4.27 ft), input section cable 46 cm (1.51 ft)

## Basic specifications (Accuracy at 23 ±5°C/73 ±9°F, 35 to 80% rh, after 30 minutes of warm-up time; accuracy guaranteed for 1 year)

| | |
|---|---|
| Measurement functions | (1) DC mode, (2) AC mode, (3) RMS mode |
| Input type | Balanced differential input |
| Voltage division ratio | 1/1000 |
| Input resistance, capacity | H–L: 9 MΩ, approx 10 pF (C at 100 kHz)<br>H-case, L–case: 4.5 MΩ, approx 20 pF (C at 100 kHz) |
| Output | BNC terminal (DC/AC/RMS 3-mode selectable output) |
| Max. allowable input | 2000 V DC, 1000 V AC (CAT II ), 600 V AC/DC (CAT III ) |
| Max. rated voltage to earth | When using grabber clip: 1500V AC/DC (CAT II), 600V AC/DC (CAT III)<br>When using alligator clip: 1000V AC/DC (CAT II), 600V AC/DC (CAT III) |
| Common mode elimination ratio | 10000:1 or better (input/output ratio at 50/60 Hz with input shorted)<br>1000:1 or better (input/output ratio at 100 kHz or 1 MHz with input shorted) |
| Power consumption | (1)AC ADAPTER 9418-15 (DC 12 V±10%)*1<br>(2)Power supply through POWER CORD 9324 connected to logic connector on MEMORY HiCORDER.<br>(3)Power supply through POWER CORD 9325 connected to sensor connector on F/V UNIT 8940.<br>(4)Power supply through POWER CORD 9328 connected to DC jack on Input UNIT 8950/ 8952/ 8953/ 8955, for the MEMORY HiCORDER 8855.<br>(5)Power supply through POWER CORD 9248 connected to the PROBE POWER UNIT 9687, for MEMORY HiCORDER 8860-50/ 8861-50.<br>*1 Operating voltage range: +5 to +12V, less than 300mA. DC jack OD 5.5 mm, ID 2.1 mm |

## DC mode

| | |
|---|---|
| Application | Waveform monitor output |
| Frequency characteristic | DC to 10 MHz, ±3 dB |
| DC amplitude accuracy | ±1 % f.s. (1000 V DC or less)<br>±3 % f.s. (2000 V DC or less) f.s.=2000 V DC |

## AC mode

| | |
|---|---|
| Application | Detection of power line surge noise |
| Frequency response | 1 kHz to 10 MHz ±3 dB |

## RMS mode

| | |
|---|---|
| Application | Rectified RMS output of DC and AC voltages |
| Frequency response Output accuracy | DC, 40 Hz to 1 kHz : ±1 % f.s.<br>1 kHz to 100 kHz : ±4 % f.s. f.s.=1000 V AC |
| Response speed | 200 ms or less (400 V AC ) |

## Other

| | |
|---|---|
| CE mark compliance | Safety: EN61010, EMC: EN61326 |
| Supplied accessories | Grabber clips × 2, Alligator clips × 2, Carrying case × 1 |

### How to power the 9322 with a HIOKI MEMORY HiCORDER

| | Logic Connector | | | F/V Unit 8940's sensor terminal | | | Input unit 8950, 8952, 8953-10, 8955's DC jack | 9687 Probe Power Unit for 8860 series only |
|---|---|---|---|---|---|---|---|---|
| Main unit | Required power cord (s) | Number of Maximum connectable 9322s | Simultaneous use of 9320, 9321/-01 logic probes | Required power cord | Number of Maximum connectable 9322s | Max. Units when 3273 or 9270 series are also used | | Use with the power cord 9248 |
| 8826 | 9324 | 4 | 4 × 9322: No<br>3 × 9322: 4<br>2 × 9322: 6<br>1 × 9322: 7 | 9325 | 6 | 6 | | |
| 8835-01 | 9324 | 1 | No | 9325 | 4 | 4 | | |
| 8835 *1 | 9324 | 1 | No | 9325 | 4 | 4 | | |
| 8841 *1 | 9324 | 1 | No | 9325 | 6 | 4 | | |
| 8842 *1 | 9324 | 1 | No | 9325 | 6 | 4 | | |
| 8847 *2 | 9324 & 9323 | 4 *2 | 4 × 9322: No<br>3 × 9322: 3<br>2 × 9322: 3<br>1 × 9322: 3 | | | | | |
| 8855 | 9324 & 9323 | 2 | 2 × 9322: No<br>1 × 9322: 3 | | | | 9328 | |
| 8860-50 | 9324 & 9323 | 2 | 2 × 9322: No<br>1 × 9322: 3 | 9325 | 6 | 8 | | 8 *3 |
| 8860 *1 | 9324 & 9323 | 2 | 2 × 9322: No<br>1 × 9322: 3 | 9325 | 6 | 8 | | 8 *3 |
| 8861-50 | 9324 & 9323 | 2 | 2 × 9322: No<br>1 × 9322: 3 | 9325 | 6 | 8 | | 8 *3 |
| 8861 *1 | 9324 & 9323 | 2 | 2 × 9322: No<br>1 × 9322: 3 | 9325 | 6 | 8 | | 8 *3 |

*1 Discontinued
*2 Not including the channels available with the LOGIC UNIT 8973
*3 Depends on the combination of other probes in use; please consult with your HIOKI distributor

(1) Power supply from the AC ADAPTER 9418-15

(2) Power supply from logic probe terminal via the POWER CORD 9324

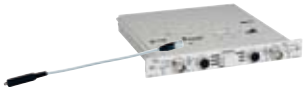

(3) Power supply from sensor connector on 8940 via the POWER CORD 9325

(4) Power supply from the MEMORY HiCORDER 8855 via the POWER CORD 9328

(5) Power supply from the MEMORY HiCORDER 8860-50/ 8861-50 via the POWER CORD 9248 and the PROBE POWER UNIT 9687

## Ordering information

**DIFFERENTIAL PROBE 9322** (up to 2kV DC, 1kV AC)

- The **DIFFERENTIAL PROBE 9322** cannot be used by itself. Please use it in combination with a **HIOKI MEMORY HiCORDER**.
- The **DIFFERENTIAL PROBE 9322** requires a power supply.

| ● Usable HiCORDERs | Usable Input Units |
|---|---|
| MEMORY HiCORDER 8860-50/8861-50 (Input unit sold separately) | 8956, 8957, 8959, 8936, 8938 |
| MEMORY HiCORDER 8860/8861 (Input unit sold separately) | 8956, 8957, 8959, 8936, 8938 |
| MEMORY HiCORDER 8855 (Input unit sold separately) | 8950, 8952, 8953-10, 8955 |
| MEMORY HiCORDER 8841/8842 (Input unit sold separately) | 8936, 8938 |
| MEMORY HiCORDER 8835-01/8835 (Input unit sold separately) | 8936, 8938 |
| MEMORY HiCORDER 8826 (Input unit sold separately) | 8936, 8938 |

| | |
|---|---|
| MEMORY HiCORDER 8807/8808 | (Equipped with input section as standard) |
| MEMORY HiCORDER 8807-50/8808-50 | (Equipped with input section as standard) |
| POWER HiCORDER 8714/8715 | (Equipped with input section as standard) |

### Option

**POWER CORD 9248**
Power supply from the PROBE POWER UNIT 9687 for the MEMORY HiCORDER 8860-50/8861-50, 70 cm (2.30 ft) length

**AC ADAPTER 9418-15**
For powering Differential probe **9322**, 100 to 240 V AC

**POWER CORD 9324**
Power supply from large type logic connector, 50 cm (1.64 ft) length

**POWER CORD 9328**
Power supply from 8950, 8952, 8953-10, 8955 input units for the MEMORY HiCORDER 8855, 15 cm (0.49 ft) length

**POWER CORD 9325**
Power supply from 8940 sensor connector, 30 cm (0.98 ft) length

**PROBE POWER UNIT 9687**
Factory-installed option - only use with the MEMORY HiCORDER 8860-50/8861-50, built in on the bottom case. Simultaneously power up to 8 units of Differential Probe 9322. (Max. 3 A output)


HIOKI
HIOKI E. E. CORPORATION

**HEAD OFFICE :**
81 Koizumi, Ueda, Nagano, 386-1192, Japan
TEL +81-268-28-0562 / FAX +81-268-28-0568
E-mail: os-com@hioki.co.jp

**HIOKI USA CORPORATION :**
6 Corporate Drive, Cranbury, NJ 08512 USA
TEL +1-609-409-9109 / FAX +1-609-409-9108
E-mail: hioki@hiokiusa.com

**HIOKI (Shanghai) Sales & Trading Co., Ltd. :**
1608-1610 Shanghai Times Square Office, 93 Huai Hai Zhong Road, Shanghai, P.R.China POSTCODE: 200021
TEL +86-21-6391-0090/0092 FAX +86-21-6391-0360
E-mail: info-sh@hioki.com.cn

**Beijing Office :**
A-2602 Freetown, 58 Dong San Huan Nan Road
Beijing, P.R.China POSTCODE: 100022
TEL +86-10-5867-4080/4081 FAX +86-10-5867-4090
E-mail: info-bj@hioki.com.cn

**Guangzhou Office :**
Room A-3206, Victory PlazaServices Center, No.103, Tiyuxi Road, Guangzhou, P.R.China POSTCODE:510620
TEL +86-20-38392673/2676 FAX +86-20-38392679
E-mail: info-gz@hioki.com.cn





All information correct as of May. 11, 2009. All specifications are subject to change without notice.
9322E5-95M-00P Printed in Japan